嘉尼企業股份有限公司CANAL ELECTRONIC CO.,LTD.

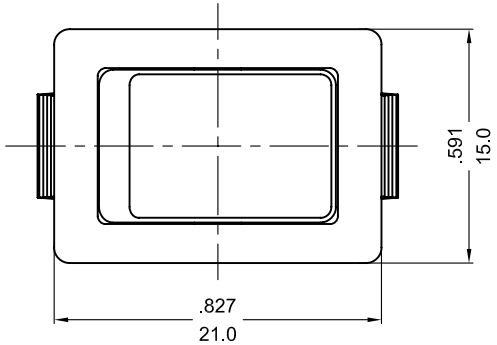

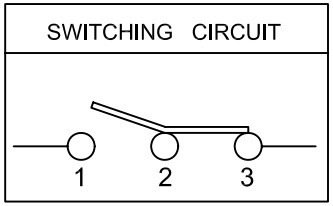

ROCKER SWITCH MODEL MR2 SERIES

RATING:10(4)A 125/250V~T55 (cURus/ENEC15)
DIELECTRIC VOLTAGE-WITHSTAND:1,500VAC FOR 1 MINUTE
INSULATION RESISTANCE:DC 500V 100M£[(MIN.)
CONTACT RESISTANCE:20m£[INITIAL (MAX.)
WATERPROOF GRADE:IP68

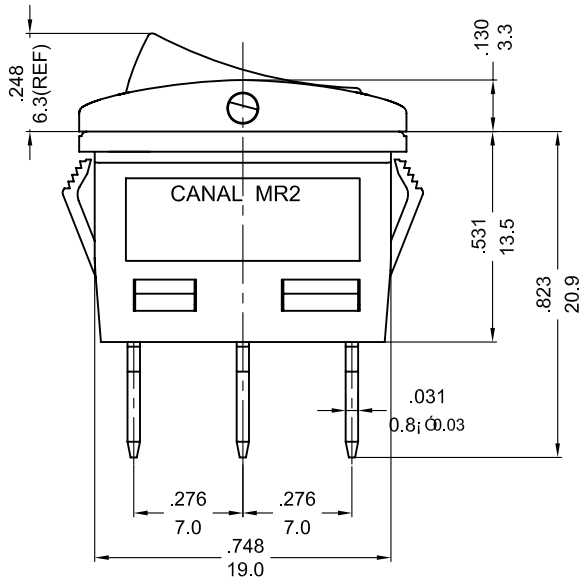

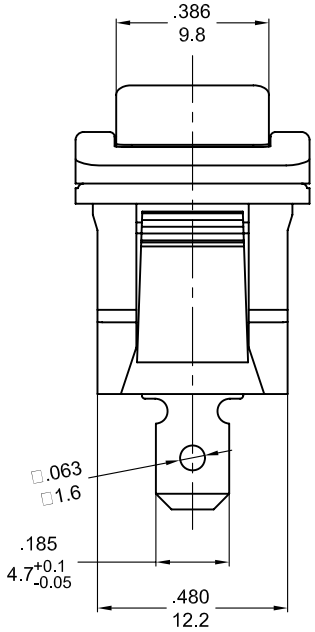

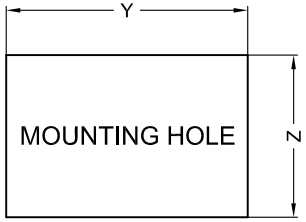

X(PANEL THICKNESS)	Y(CUTOUT DIMENSION)	Z(CUTOUT DIMENSION)
0.75~1.25mm	$19.2^{+0.1}_{-0}$ mm	$12.9^{+0.15}_{-0}$ mm
1.25~2mm	$19.4^{+0.1}_{-0}$ mm	$12.9^{+0.15}_{-0}$ mm
2~3mm	$19.8^{+0.1}_{-0}$ mm	$12.9^{+0.15}_{-0}$ mm

PANEL CUTOUT DIMENSION TABLE

嘉尼工程
2020.03.11
文件管制章

NOTE: TOLERANCES UNLESS OTHERWISE SPECIFIED:±.012/0.3 (in/mm)

REVISION	DESCRIPTION	REVISED BY	TOLERANCES				ANGLE ½°	UNIT	mm	PART NAME	MR2 SPEC DRAWING	DWG NO
4			DRAWN BY	楊偉韶	DESIGNED BY	蔡 劍	SCALE	2/1				S8016A
3												
2			CHECKED BY		APPROVED BY		DATE	2020.03.11		PART NO	MR2-120C2N-NBBP-29NC	
1 2020.03.11	首次出圖	楊偉韶										